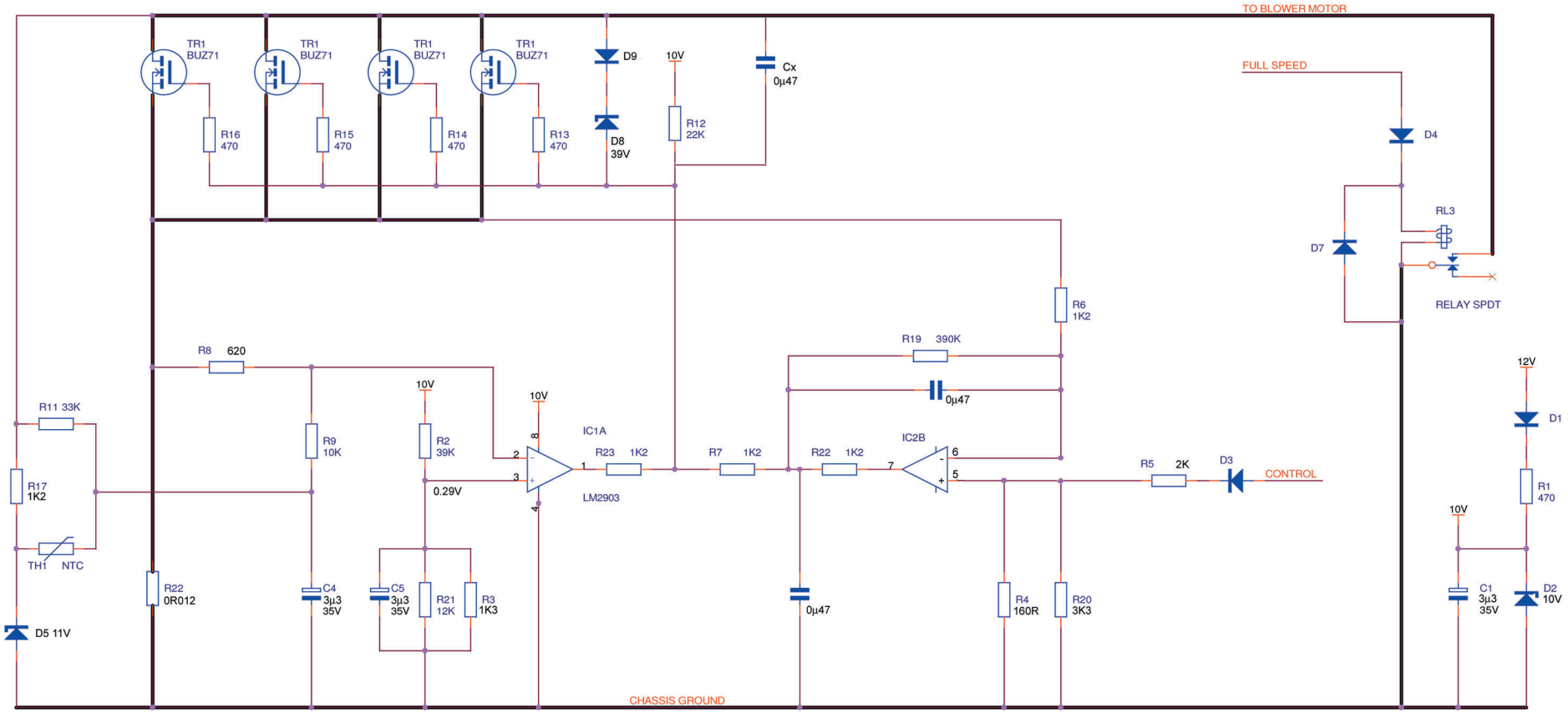

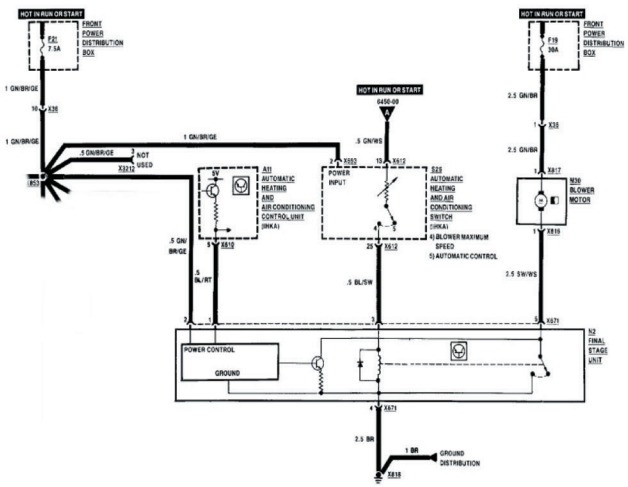

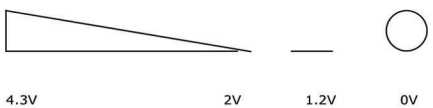

Voltage seen at 'CONTROL' input

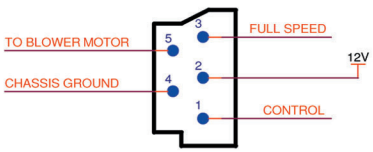

Title	BMW E32 FINAL STAGE UNIT (SWORD)	
Size	Document Number Drawn by Timm (www.meeknet.co.uk/e32) with thanks to D, Conway	Rev A
Date: Monday, November 02, 2009	Sheet 1 of 1	